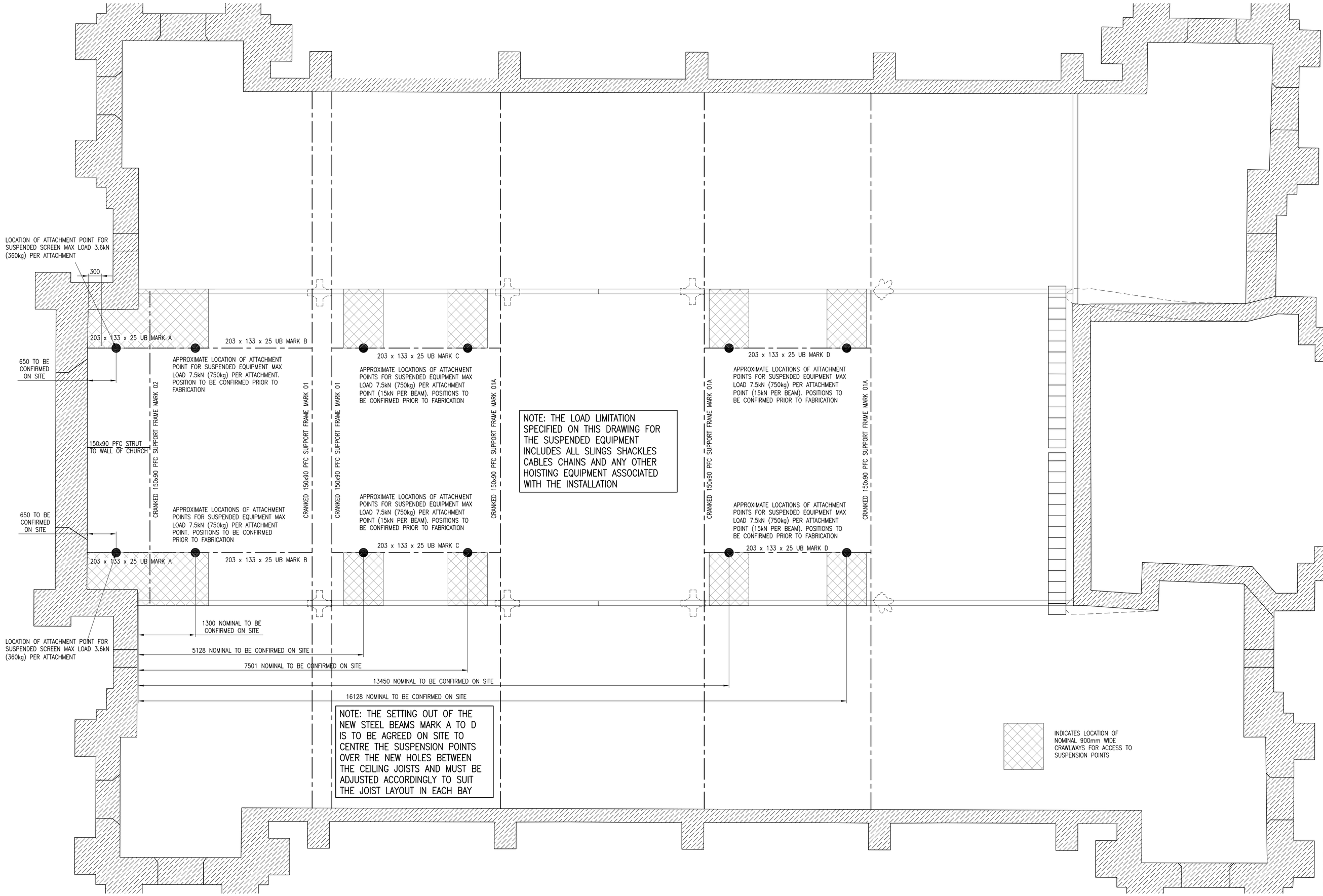

NOTE: THE LOAD LIMITATION SPECIFIED ON THIS DRAWING FOR THE SUSPENDED EQUIPMENT INCLUDES ALL SLINGS SHACKLES CABLES CHAINS AND ANY OTHER HOISTING EQUIPMENT ASSOCIATED WITH THE INSTALLATION

NOTE: THE SETTING OUT OF THE NEW STEEL BEAMS MARK A TO D IS TO BE AGREED ON SITE TO CENTRE THE SUSPENSION POINTS OVER THE NEW HOLES BETWEEN THE CEILING JOISTS AND MUST BE ADJUSTED ACCORDINGLY TO SUIT THE JOIST LAYOUT IN EACH BAY

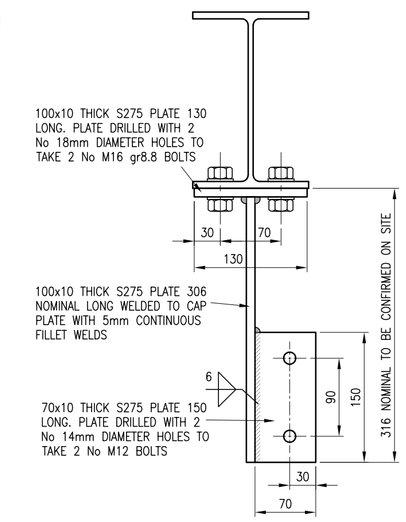

DETAIL Q
SCALE 1:5

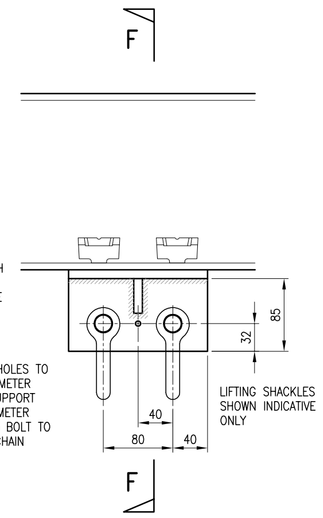

DETAIL F
SCALE 1:5

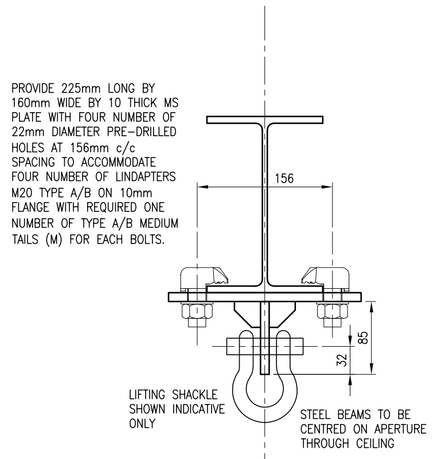

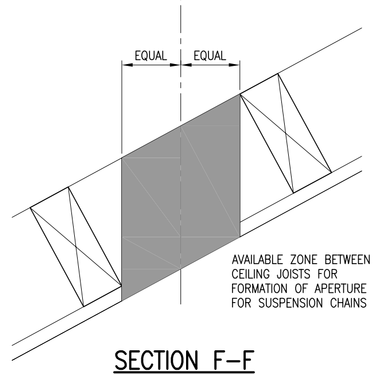

SECTION F–F
SCALE 1:5

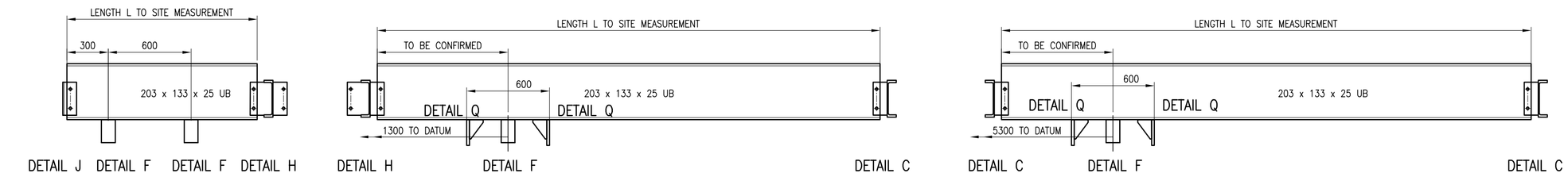

ELEVATION ON JOIST MARK A
NOT TO SCALE

ELEVATION ON JOIST MARK B
NOT TO SCALE

ELEVATION ON JOIST MARK C
NOT TO SCALE

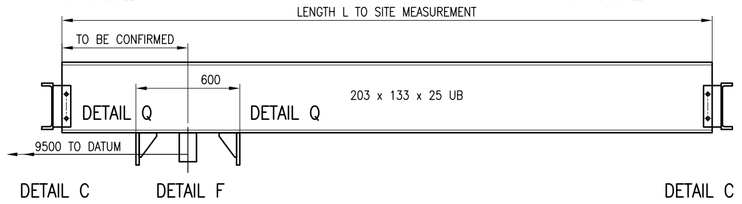

ELEVATION ON JOIST MARK D
NOT TO SCALE

HEALTH AND SAFETY/CDM
Clarke Nicholls & Marcel Ltd's role on this project is that of 'Designer' as defined by CDM Regulations and as such the design has been considered for foreseeable hazards and associated risks.
H. & S. matters which have been identified as being significantly hazardous:

However, these items should in no way be considered as a complete and final list. The Contractor's normal H. & S. obligations still apply when undertaking constructional operations both on and off-site. This also applies to all Works/Sub-contractors.

GENERAL NOTES
1. This drawing is to be read in conjunction with all relevant architects, and all other drawings. Any inconsistencies in relation to the above should be brought to the attention of the contract administrator by the contractor as soon as possible prior to construction.
2. For the purposes of construction this drawing must not be scaled, and only written or calculated dimensions are to be used.
3. ALL HOT ROLLED STEELWORK THOROUGHLY CLEANED AND DEGREASED PRIOR TO BLAST CLEANING TO SA2½ AND SHOP PAINTED WITH 2 COATS HIGH BUILD ZINC PHOSPHATE PRIMER WITH A DFT OF 80 MICRONS TOUCHED UP ON SITE AS REQUIRED

Rev	Revision Note	Revision Date	Drawn By	Checked By
C4	DETAIL Q AMENDED TO PROVIDE BOLTED CONNECTION TO BEAM. DETAIL Q CALLED UP ON BEAM ELEVATIONS	04.06.21	ICT	MS
C3	CONSTRUCTION ISSUE. REDRAWN TO SHOW REVISED BEAMS AND HANGERS CONNECTION DETAIL.	26.04.21	KR	ICT
C2	DETAIL L DELETED. AV ACCESS POINT SUPPORT DETAIL Q ADDED. AV ATTACHMENT POINTS AMENDED AND DETAIL Q ADDED BEAM MARK A	02.03.21	ICT	MS
C1	CONSTRUCTION ISSUE	09.02.21	ICT	MS

Contract
HOLY TRINITY CHURCH
CHELTENHAM

Drawing
ROOF PLAN SHOWING
NEW STEEL WORK

Architect/Client
FALCONER & GILBERT SCOTT ARCHITECTS
TRINITY CHELTENHAM P.C.C.

cnm Clarke Nicholls Marcel
CIVIL & STRUCTURAL ENGINEERS
Seasons Business Complex, Quat Goose Lane
Swindon Village, Cheltenham GL51 9RX
t +44 (0)1242 528232
f +44 (0)1242 526356
www.clarkenichollsmarcel.com
Registered Company № 4361051

Drawing Status
CONSTRUCTION ISSUE

Drawn By: ICT	Checked By: MS
Date: MARCH 2020	Scale @ A1: 1:50

Drawing No.
11074/C/010

C1 C2 C3 C4

© Clarke Nicholls Marcel Limited