ALL RESIN BOLT FIXINGS INTO EXISTING STONE MASONRY ARE TO BE LOAD TESTED IN ACCORDANCE WITH THE MANUFACTURER'S RECOMMENDATIONS AND CNM INFORMED OF THE TEST RESULTS

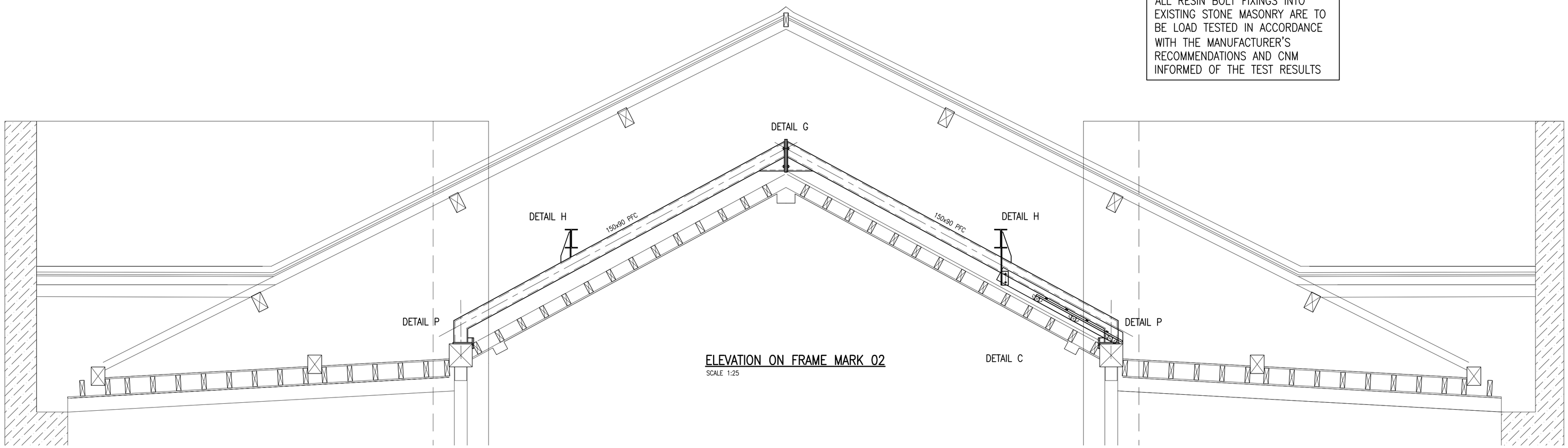

ELEVATION ON FRAME MARK 02
SCALE 1:25

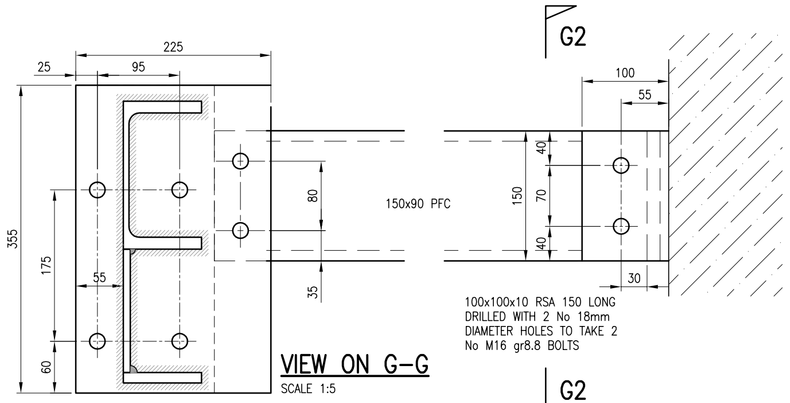

VIEW ON G-G
SCALE 1:5

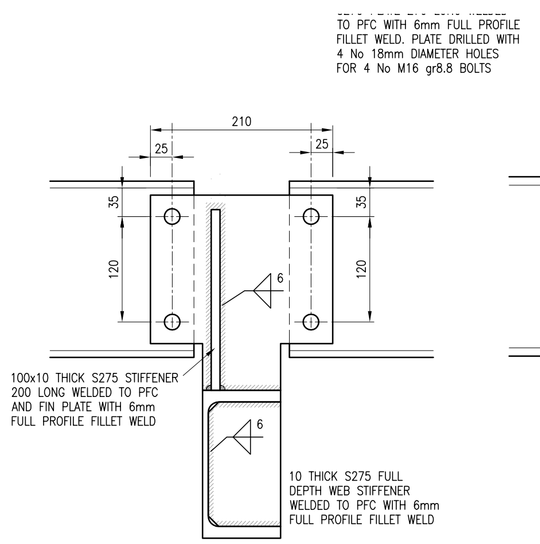

VIEW ON H-H
SCALE 1:5

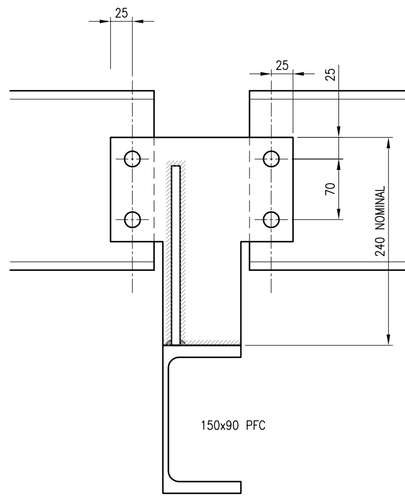

DETAIL H

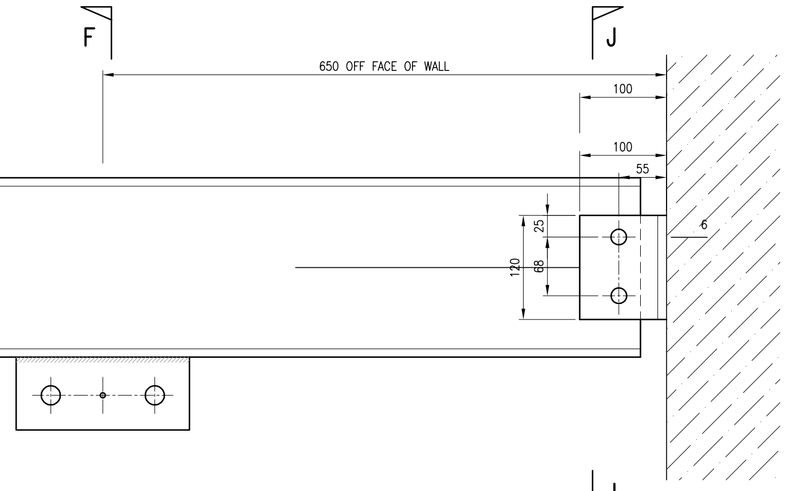

DETAIL F F
SCALE 1:5

DETAIL J J
SCALE 1:5

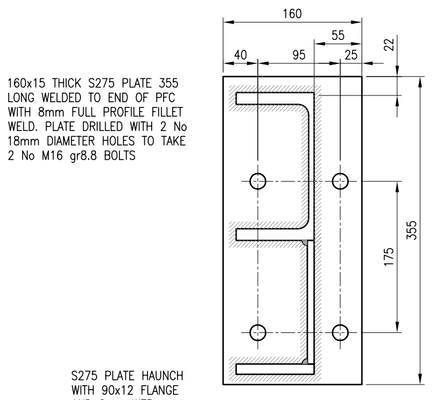

VIEW ON G1-G1
SCALE 1:5

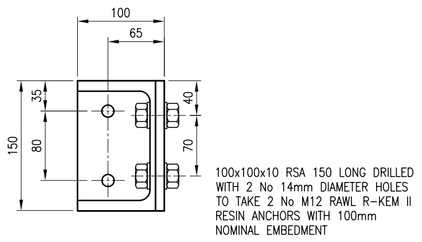

SECTION G2-G2
SCALE 1:5

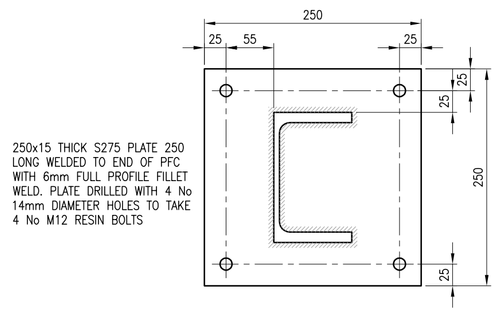

ELEVATION ON END PLATE DETAIL P
SCALE 1:5

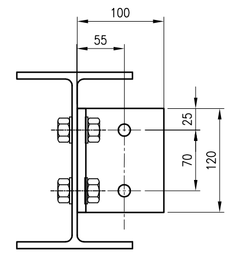

SECTION J-J
SCALE 1:5

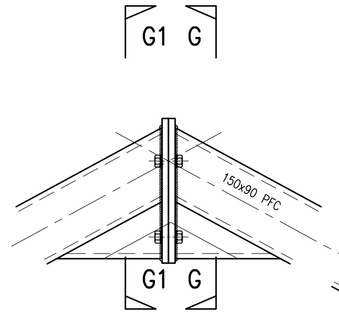

DETAIL G
SCALE 1:10

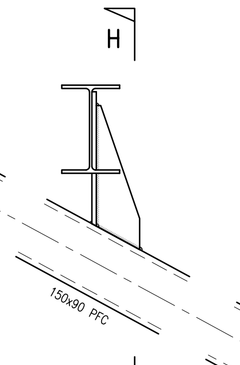

DETAIL H
SCALE 1:10

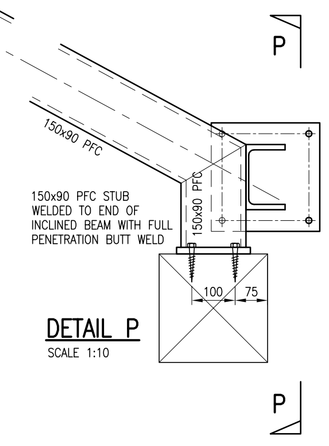

DETAIL P
SCALE 1:10

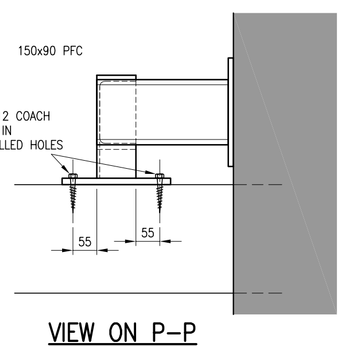

VIEW ON P-P
SCALE 1:10

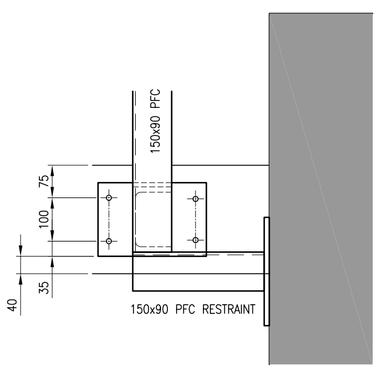

PLAN ON DETAIL P
SCALE 1:10

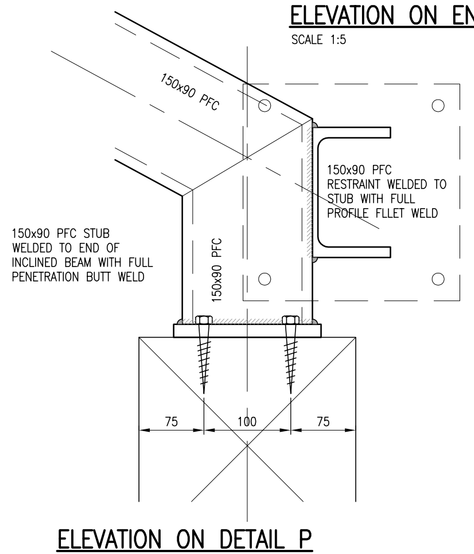

ELEVATION ON DETAIL P
SCALE 1:5

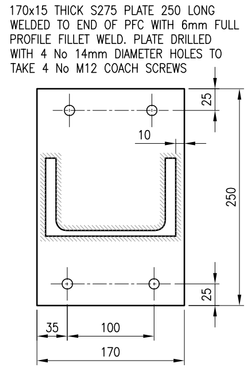

PLAN ON DETAIL P
SCALE 1:5

HEALTH AND SAFETY/CDM
Clarke Nicholls & Marcel Ltd's role on this project is that of 'Designer' as defined by CDM Regulations and as such the design has been considered for foreseeable hazards and associated risks.
H. & S. matters which have been identified as being significantly hazardous:

However, these items should in no way be considered as a complete and final list. The Contractor's normal H. & S. obligations still apply when undertaking constructional operations both on and off-site. This also applies to all Works/(Sub-)contractors.

GENERAL NOTES
1. This drawing is to be read in conjunction with all relevant architects, and all other drawings. Any inconsistencies in relation to the above should be brought to the attention of the contract administrator by the contractor as soon as possible prior to construction.
2. For the purposes of construction this drawing must not be scaled, and only written or calculated dimensions are to be used.
3. ALL HOT ROLLED STEELWORK THOROUGHLY CLEANED AND DEGREASED PRIOR TO BLAST CLEANING TO SA2½ AND SHOP PAINTED WITH 2 COATS HIGH BUILD ZINC PHOSPHATE PRIMER WITH A DFT OF 80 MICRONS TOUCHED UP ON SITE AS REQUIRED

Rev	Revision Note	Revision Date	Drawn By	Checked By
C3	CONSTRUCTION ISSUE. REDRAWN TO SHOW REVISED BEAMS AND HANGERS CONNECTION DETAIL.	26.04.21	KR	ICT
C2	REFERENCE TO DETAIL N CHANGED TO DETAIL P	22.02.21	ICT	MS
C1	CONSTRUCTION ISSUE	09.02.21	ICT	MS

Contract
HOLY TRINITY CHURCH
CHELTENHAM

Drawing
FRAME MARK 02
ELEVATION AND DETAILS

Architect/Client
FALCONER & GILBERT SCOTT ARCHITECTS
TRINITY CHELTENHAM P.C.C.

cnm Clarke Nicholls Marcel
CIVIL & STRUCTURAL ENGINEERS
Seasons Business Complex, Quat Goose Lane
Swindon Village, Cheltenham GL51 9RX
t +44 (0)1242 528232
f +44 (0)1242 526356
www.clarkenichollsmarcel.com
Registered Company № 4351192

Drawing Status
CONSTRUCTION ISSUE

Drawn By ICT	Checked By MS
Date MARCH 2020	Scale @ A1 1:50

Drawing No.
11074/C/013

C1 C2 C3

© Clarke Nicholls Marcel Limited